ENGINEERING
TOMORROW

Data Sheet

FHF Floor Heating Manifold

Application

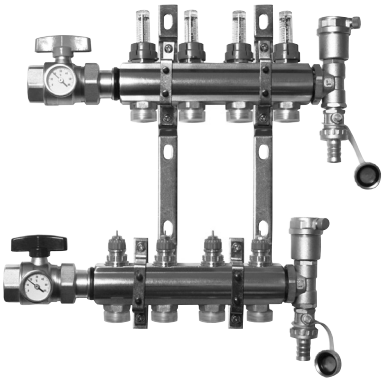

Manifold with flowmeter

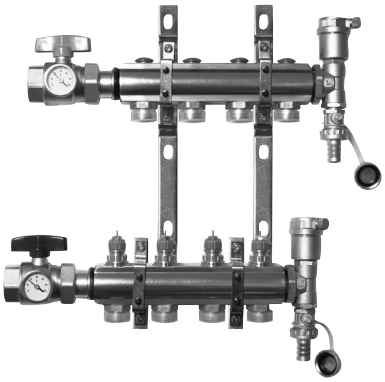

Manifold without flowmeter

The Manifold FHF is used for controlling water flow in under floor heating systems. Each tube of the floor heating system is connected to the manifold, thus making it possible to control water flow or heat supply to each room in the building individually.
The manifold consists of a supply and return manifold. The supply manifold includes possibility for individual shut-off of each circuit and as an option also flowmeter. The return manifold is equipped with integrated Danfoss pre-setting valves securing optimal hydraulic balance in the system.

The valves can be controlled electronically by thermal actuators or act as self-acting units by means of remote temperature adjusters.
The manifold is supplied in modules of up to 12 outlets. In addition extension pieces are available for connecting the manifolds in series. Ball valves are available as an option for positive shut-off between manifold and system.
The end pieces FHF-EM and FHF-EA are supplied with manual airvent or alternatively with automatic airvent, purge valve. The end pieces are placed at the end of the manifold.

System layout

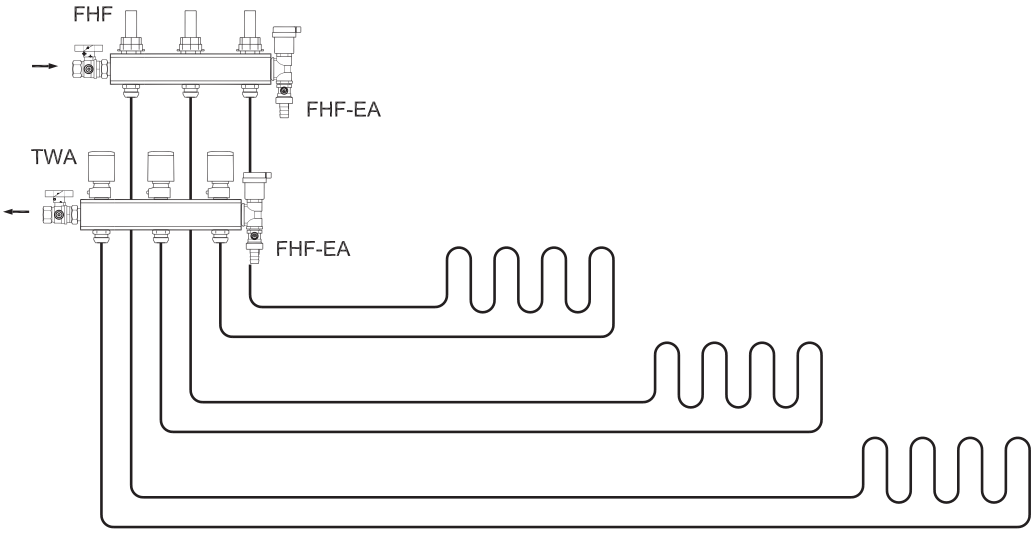

Ordering

Description		Type	Code no.
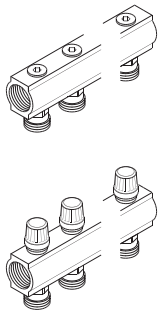	Manifold set 2+2	FHF-2	**088U0502**
	Manifold set 3+3	FHF-3	**088U0503**
	Manifold set 4+4	FHF-4	**088U0504**
	Manifold set 5+5	FHF-5	**088U0505**
	Manifold set 6+6	FHF-6	**088U0506**
	Manifold set 7+7	FHF-7	**088U0507**
	Manifold set 8+8	FHF-8	**088U0508**
	Manifold set 9+9	FHF-9	**088U0509**
	Manifold set 10+10	FHF-10	**088U0510**
	Manifold set 11+11	FHF-11	**088U0511**
	Manifold set 12+12	FHF-12	**088U0512**
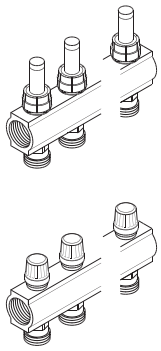	Manifold set 2+2, with flowmeter	FHF-2F	**088U0522**
	Manifold set 3+3, with flowmeter	FHF-3F	**088U0523**
	Manifold set 4+4, with flowmeter	FHF-4F	**088U0524**
	Manifold set 5+5, with flowmeter	FHF-5F	**088U0525**
	Manifold set 6+6, with flowmeter	FHF-6F	**088U0526**
	Manifold set 7+7, with flowmeter	FHF-7F	**088U0527**
	Manifold set 8+8, with flowmeter	FHF-8F	**088U0528**
	Manifold set 9+9, with flowmeter	FHF-9F	**088U0529**
	Manifold set 10+10, with flowmeter	FHF-10F	**088U0530**
	Manifold set 11+11, with flowmeter	FHF-11F	**088U0531**
	Manifold set 12+12, with flowmeter	FHF-12F	**088U0532**
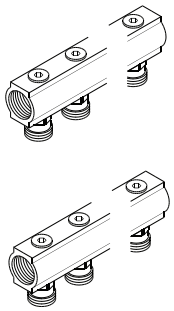	Manifold set 2+2, basic	FHF-2B	**088U0542**
	Manifold set 3+3, basic	FHF-3B	**088U0543**
	Manifold set 4+4, basic	FHF-4B	**088U0544**
	Manifold set 5+5, basic	FHF-5B	**088U0545**
	Manifold set 6+6, basic	FHF-6B	**088U0546**
	Manifold set 7+7, basic	FHF-7B	**088U0547**
	Manifold set 8+8, basic	FHF-8B	**088U0548**
	Manifold set 9+9, basic	FHF-9B	**088U0549**
	Manifold set 10+10, basic	FHF-10B	**088U0550**
	Manifold set 11+11, basic	FHF-11B	**088U0551**
	Manifold set 12+12, basic	FHF-12B	**088U0552**

Accessories

Description		Type	Code no.
	End section – automatic airvent and purge valve	FHF-EA	**088U0785**
	End section – manual airvent and purge valve	FHF-EM	**088U0786**
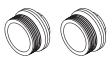	End caps – set	FHF-E	**088U0582**
	Connection pieces – set	FHF-C	**088U0583**
	Reduction bushes/pieces – set 1" - 3/4"	FHF-R	**088U0584**
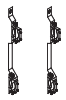	Mounting brackets – set	FHF-MB	**088U0585**
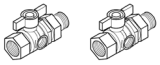	2 x ball valve 1" with tail piece – for connection to manifold and for blocking of floor heating system	FHF-BV	**088U0822**
	1 x thermometer 0 °C to 60 °C, Ø 35 mm – for flow/return temperature measurement	FHD-T	**088U0029**

Accessories

Description		Type	Code no.
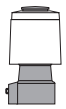	Thermal actuator, 24V, NC, Danfoss RA connection to valve	TWA-A	**088H3110**
	Thermal actuator, 230V, NC, Danfoss RA connection to valve	TWA-A	**088H3112**
	Thermal actuator, 24V, NC, with end switch, Danfoss RA connection to valve	TWA-A	**088H3114**
	Stuffing box for manifolds	DZR	**013G0554**
	Flowmeter	–	**088U0819**
	Manifold insulation	–	**088U0587**

Compression fittings

Description		Size, mm	Code no.
	Compression fittings for **PEX** tubing in accordance with ISO 15875. Max working pressure: 6 bar Test pressure: 10 bar Max, flow temperature: 95 °C G ¾″ internal thread Max, flow temperature given by the tube manufacturer must not be exceeded. [1] Compression fittings also suitable for **PERT** tubing in accordance with ISO 15875.	12 × 2	**013G4152**
		13 × 2	**013G4153**
		14 × 2	**013G4154**
		15 × 2,5	**013G4155**
		16 × 1,5	**013G4157**
		16 × 2	**013G4156** [1]
		16 × 2,2	**013G4163**
		17 × 2	**013G4162**
		18 × 2	**013G4158**
		18 × 2,5	**013G4159**
		20 × 2	**013G4160**
		20 × 2,25	**013G4093** [1]
		20 × 2,5	**013G4161**
	Compression fittings for **ALUPEX** tubing. Max working pressure: 6 bar Test pressure: 10 bar Max flow temperature: 95 °C G ¾″ Internal thread Max flow temperature given by the tube manufacturer must not be exceeded. [2] Compression fittings also suitable for **PERT/ ALU/PERT** tubing.	12 × 2	**013G4182**
		14 × 2	**013G4184**
		15 × 2,5	**013G4185**
		16 × 2	**013G4186**[2]
		16 × 2,25	**013G4187**
		18 × 2	**013G4188**
		20 × 2	**013G4190**
		20 × 2,25	**013G4093**[2]
		20 × 2,5	**013G4191**
	Compression fittings for STEEL and COPPER tubing. Max working pressure: 6 bar Test pressure: 10 bar Max flow temperature: 120 °C G ¾″ Internal thread	10	**013G4120**
		12	**013G4122**
		14	**013G4124**
		15	**013G4125**
		16	**013G4126**
		18	**013G4128**

Capacity/ commissioning

The pre-setting of the manifold valves determines the flow in the floor heating tubes and is therefore an important factor for obtaining optimal hydraulic balance in the system. A correct hydraulic balance is important if optimal comfort shall be achieved with a minimum of energy consumption and is easily carried out following the example shown below.

Example

Room 1	1.	Determine longest tube/largest room	25 m²
	2.	Desired cooling (ΔT)	5 °C (typical)
	3.	Determine heat requirement for the room	50 W/m²
	4.	Conversion factor	1,16
	5.	Calculation of flow for the room	$Q\ (l/h) = \frac{50\ W/m^2 \times 25\ m^2}{5\ °C \times 1{,}16}$ 216 l/h

Room 2	6.	Determine area for the next room	15 m²
	7.	Calculation of flow for the room (ΔT and heat requirement is assumed identical for the rooms in this case)	$Q\ (l/h) = \frac{50\ W/m^2 \times 15\ m^2}{5\ °C \times 1{,}16}$ 129 l/h

Manifold with flowmeter

Pre-setting:

Room 1 -> N
Room 2 -> 5

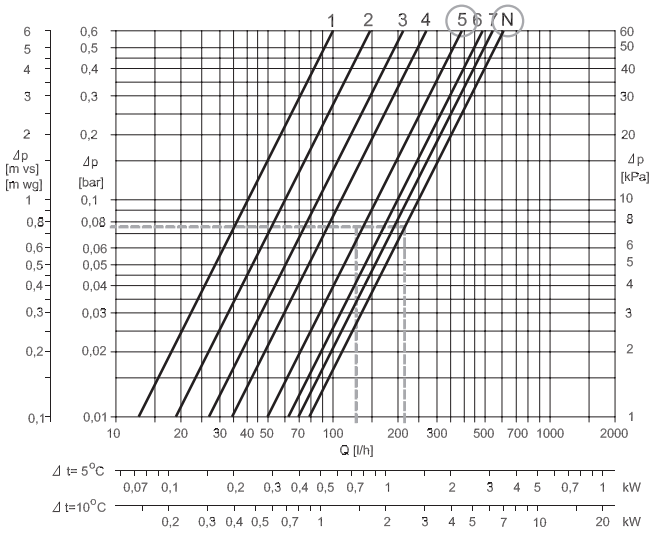

Manifold without flowmeter

Pre-setting:

Room 1 -> N
Room 2 -> 6

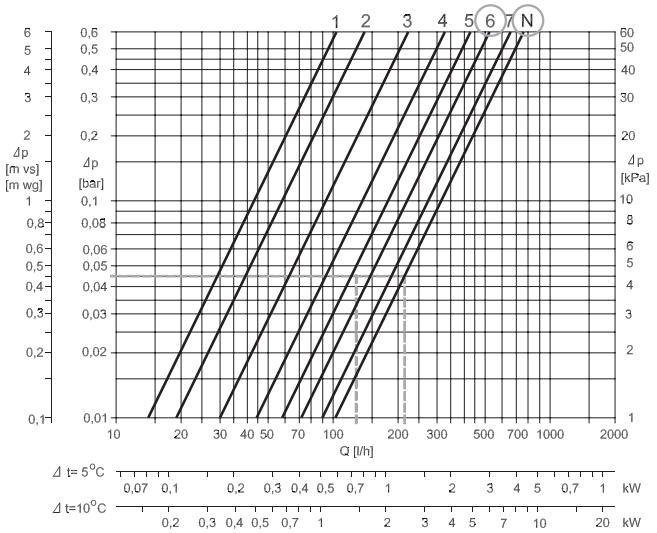

Pre-setting the manifold valves

The diagrams shows the capacities for each heating circuit at different pre-settings of the manifold valves. Please note that the capacities are slightly different depending on whether a manifold with flowmeter or a manifold without flowmeter has been chosen. Based on the above calculations and capacity diagrams each manifold valve is pre-set by rotating the red ring until the correct value on the ring is in-line with the sight mark on the valve.

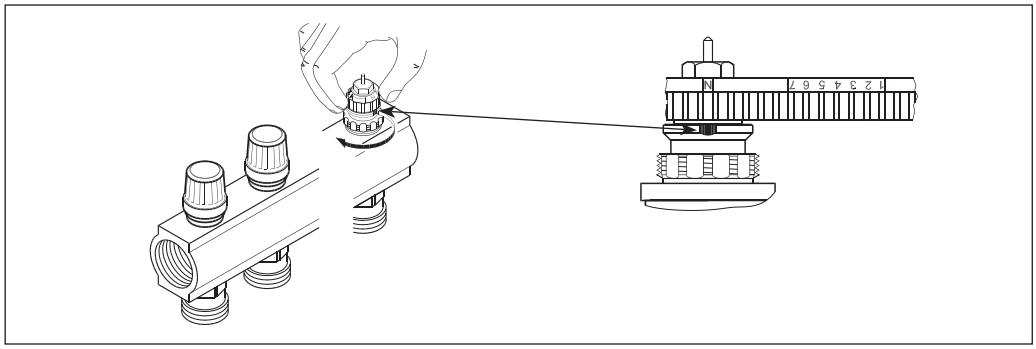

Design

Item		Description	Material
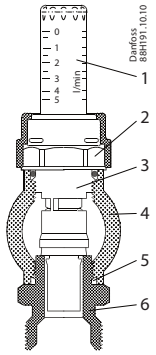 *Supply manifold with flowmeter*	1	Sightglass	Heat resistant plastic
	2	Flowmeter nut	Brass, CuZn39Pb3
	3	Flowmeter insert	Brass, CuZn39Pb3
	4	Supply manifold body	Brass, CuZn40Pb2
	5	O-ring	EPDM
	6	Union for compression fitting	Brass, CuZn40Pb2

Item		Description	Material
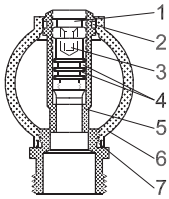 *Supply manifold without flowmeter*	1	Lock washer	Brass, CuZn40Pb2
	2	O-ring	EPDM
	3	Valve spindle	Brass, CuZn40Pb2
	4	O-ring	EPDM
	5	Valve tube	Brass, CuZn40Pb2
	6	Supply manifold body	Brass, CuZn40Pb2
	7	O-ring	EPDM

Item		Description	Material
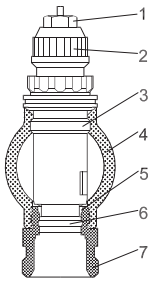 *Return manifold with control valve*	1	Gland seal	-
	2	Pre-setting ring	PBT
	3	Valve body	Brass, CuZn40Pb2
	4	Return manifold body	Brass, CuZn40Pb2
	5	K_v insert	Brass, CuZn39Pb3
	6	O-ring	EPDM
	7	Union for compression fitting	Brass, CuZn40Pb2

Operation conditions

Max. differential pressure:	0,6 bar.
Max. working pressure:	Manifold without flowmeter 10 bar / Manifold with flowmeter 6 bar.
Max. test pressure:	Manifold without flowmeter 16 bar / Manifold with flowmeter 10 bar.
Max. flow temperature:	90 °C.

Dimensions

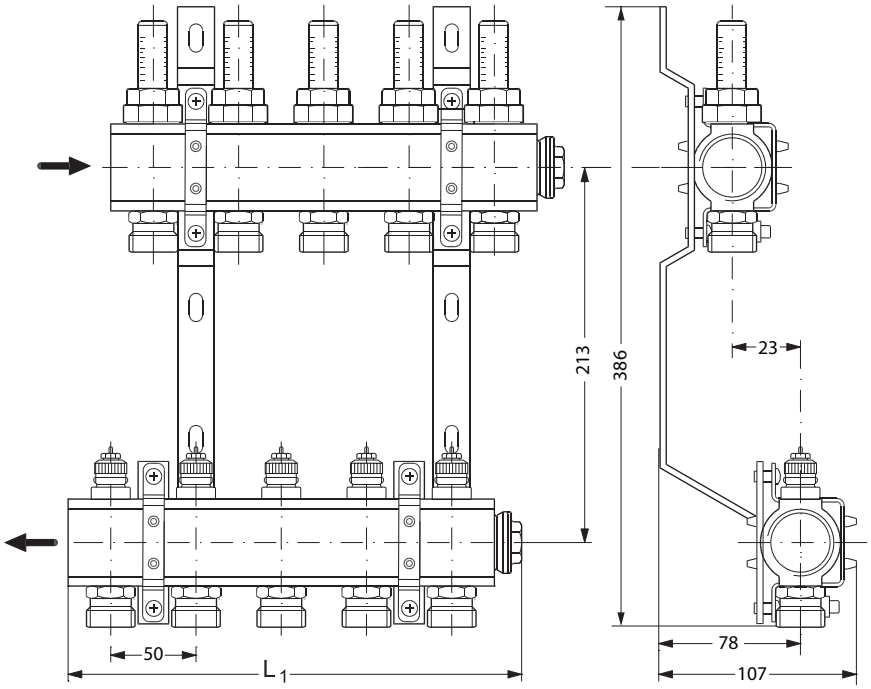

Type	2+2	3+3	4+4	5+5	6+6	7+7	8+8	9+9	10+10	11+11	12+12
L1 (mm)	111	161	211	261	311	361	411	461	511	561	611

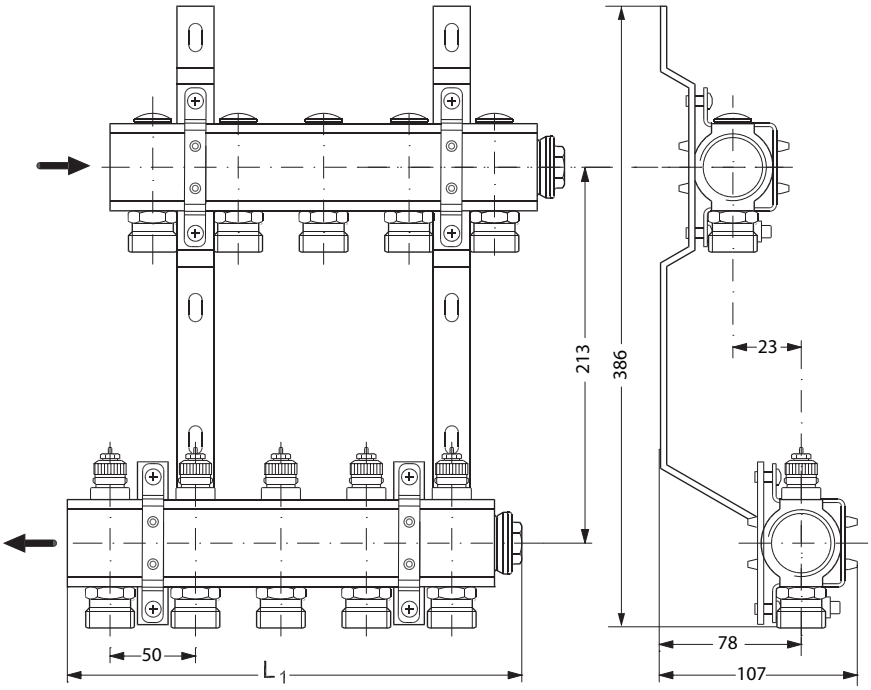

Type	2+2	3+3	4+4	5+5	6+6	7+7	8+8	9+9	10+10	11+11	12+12
L1 (mm)	111	161	211	261	311	361	411	461	511	561	611

Dimensions

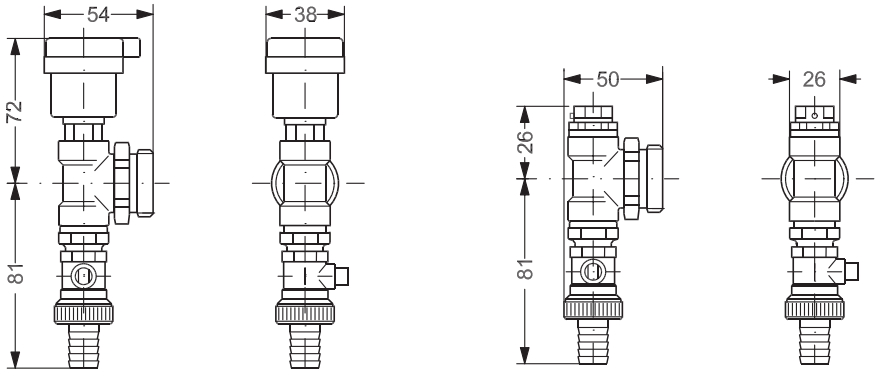

FHF-EA

FHF-EM

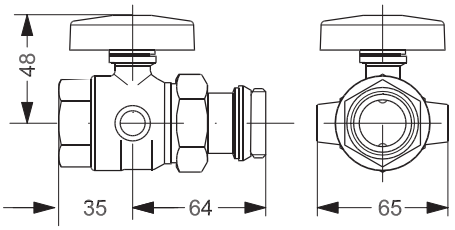

FHF-BV

Danfoss A/S
Heating Segment • danfoss.com • +45 7488 2222 • E-Mail: heating@danfoss.com